A-1
B-47B/CHAR
SERVICE

CLASSIFICATION CANCELLED
(OR CHANGED TO Unclassified)
BY AUTHORITY OF Issue Tr 20 Oct 56
(INDIVIDUAL OR WRITTEN AUTHORITY)
BY Alice E. Vander Voort 13 Jan 56
(NAME & GRADE OF INDIVIDUAL MAKING CHANGE) (DATE)

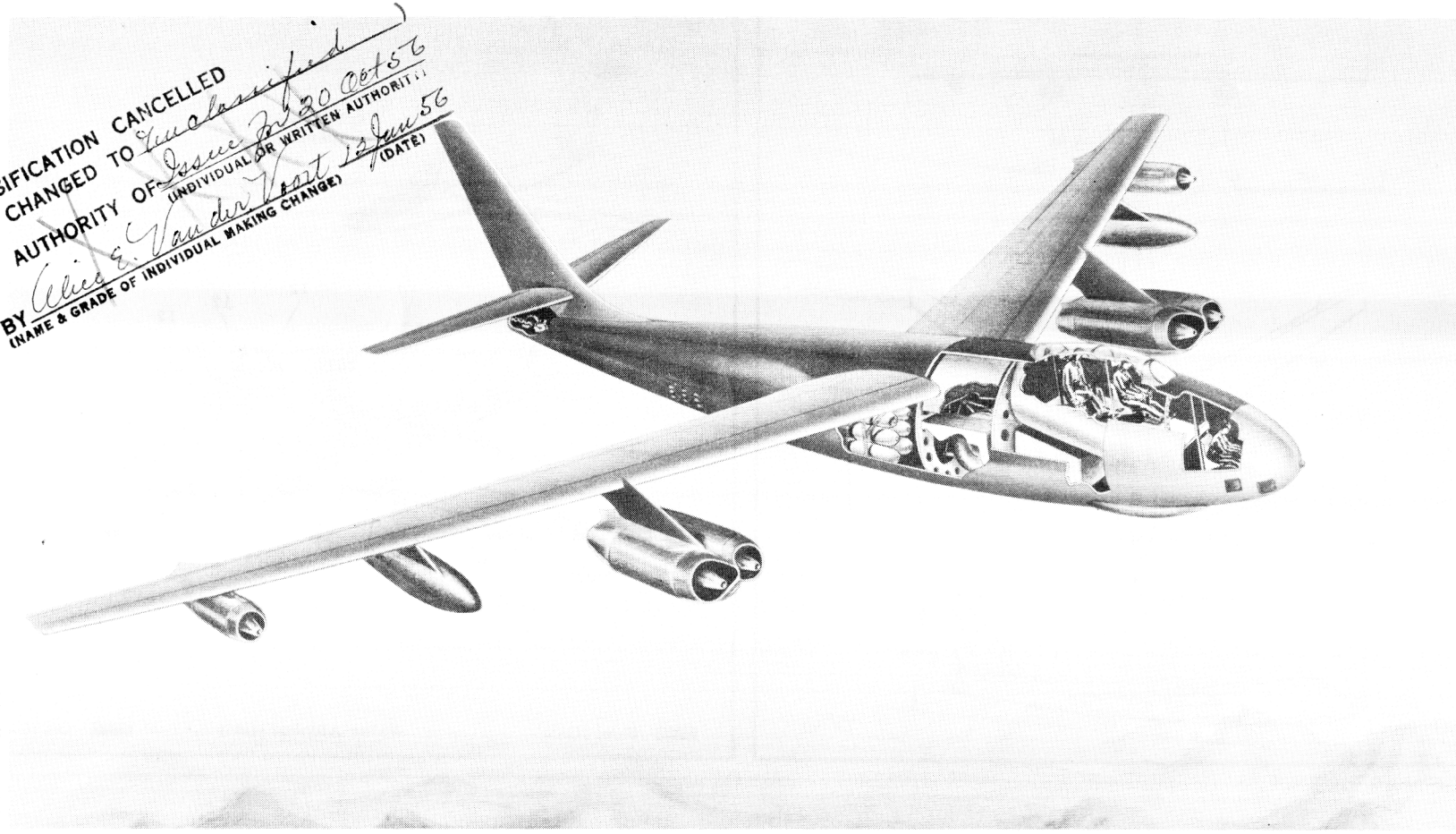

Classification cancelled
or changed to Unclassified
AUTH. AFSC-AFLC Sec Class. Guide 1 Jan 64
By a.R. Donnelson 1 Apr 64 13 Dec 1966
Signature and Grade

DOD Dir 5200.10

Standard Aircraft Characteristics

BY AUTHORITY OF
COMMANDING GENERAL
AIR MATERIEL COMMAND
U. S. AIR FORCE

B-47B

STRATOJET

Boeing

SIX J47-GE-11

GENERAL ELECTRIC

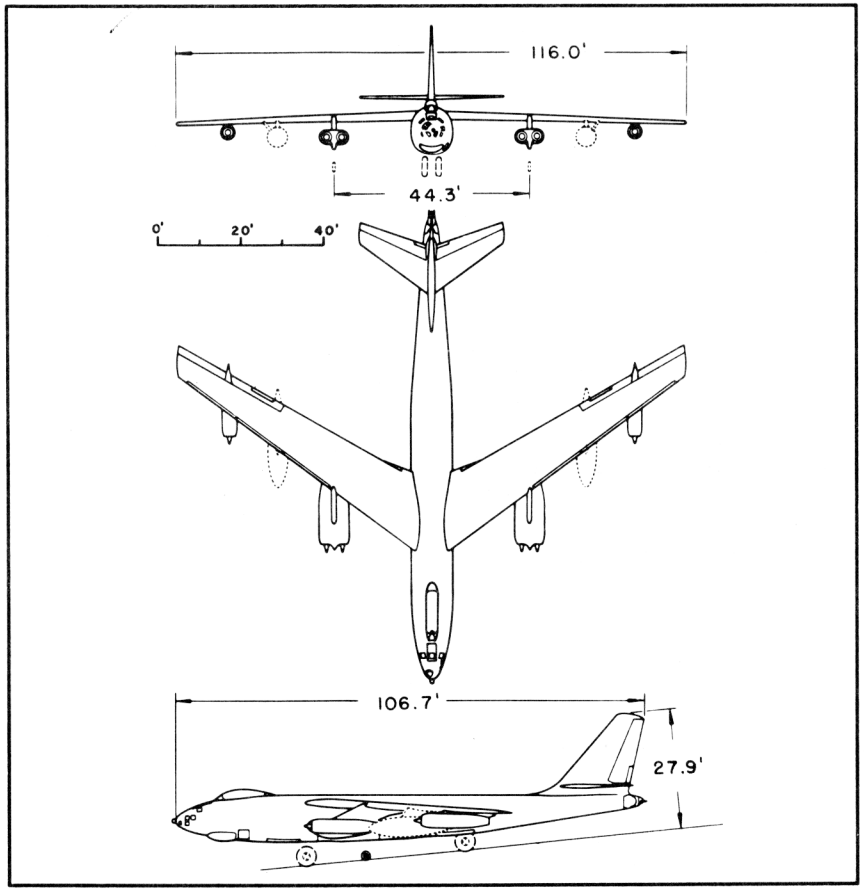

Wing Area ..... 1428 sq ft
Aspect Ratio 9.43
Wing Section ..... Boeing 145
M. A. C. ..... 156"

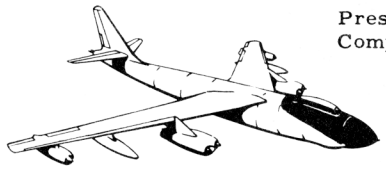

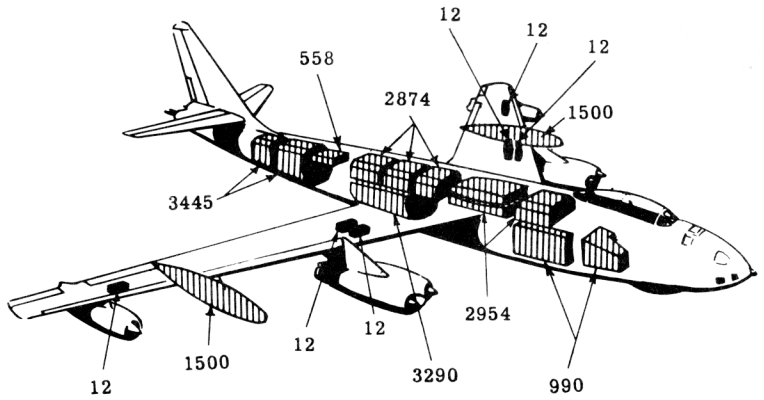

▨ Fuel (Gal) ☆ Water Alcohol (Gal) ■ Oil (Gal)

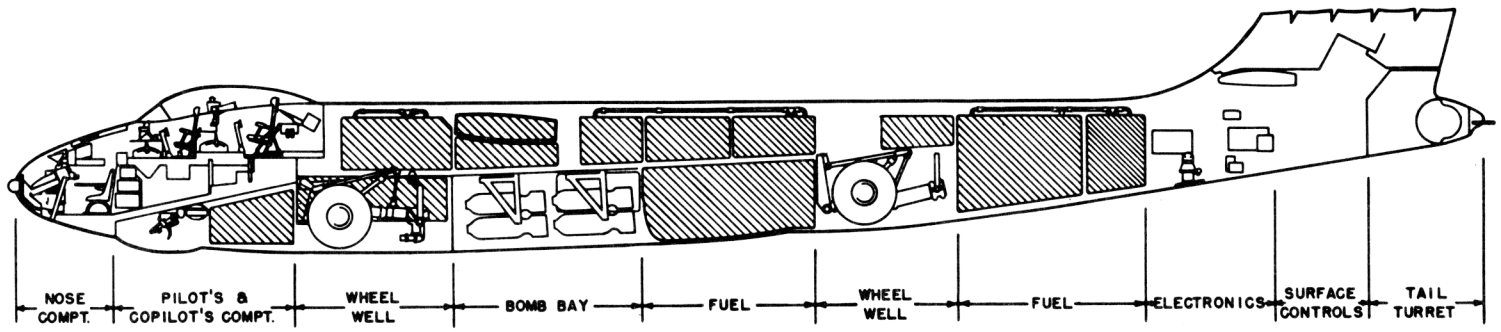

POWER PLANT

No. & Model	(6) J47-GE-11
Mfr	General Electric
Engine Spec No.	E-583
Type	Axial
Length	144"
Diameter	39"
Weight (dry)	inbd 2485 lb outbd 2515 lb

ATO

No. & Model	(18) 14AS1000
Mfr	Aerojet
Weight (loaded)	200 lb ea

or

No. & Model	(18) 15KS1000
Mfr	Aerojet
Weight (loaded)	131 lb ea

ENGINE RATINGS

S. L. Static	LB - RPM - MIN
Max:	5200 - 7950 - 5
Mil:	5200 - 7950 - 30
Nor:	4730 - 7630 - Cont.

ATO

Total Thrust (lb)	18,000
Duration (sec)	14

or

Total Thrust (lb)	18,000
Duration (sec)	15

Mission and Description

Navy Equivalent: None Mfr Model: 450-11-10

The B-47B is a high speed, medium, jet bomber whose tactical mission is the destruction by bombs of land or naval materiel objectives.

The normal crew consists of pilot, co-pilot-weaponier-gunner and bombardier-navigator.

Features incorporated for improved crew comfort and efficiency include automatic heating, ventilation, pressurization, NESA glass de-icing for the pilot's windshield, rain repellant for windshield in lieu of windshield wipers and hydraulic boost on all control surfaces. A spoiler door is provided at the main entrance door to facilitate in-flight escape.

The wing and empennage utilize thermal anti-icing. Single point ground fueling and air to air refueling is provided as is CO_2 purging for fuel tanks.

A two gun tail turret, controlled by radar sight at the co-pilot's station, is installed. An A-2 Fire Control System is utilized. A rotatable seat allows the co-pilot to face aft while functioning as fire control operator.

Solid fuel rockets for assisted take-off, a braking parachute for decreasing landing roll distance and anti-skid device for braking are provided. The bicycle type landing gear is electrically operated.

There are provisions for a periscopic sextant and a bomb scoring device.

Development

Design initiated:	Sep 48
First flight:	27 Feb 51 (est)
First acceptance:	Mar 51 (est)

WEIGHTS

Loading	Lb	L. F.
Empty	77,830(E)	
Basic	82,410(E)	
Design	125,000	3.0
Combat	*121,800	
Max T. O.	**181,440	2.0
	‡185,000	2.17
Max Land	**180,000	1.70
Max in-flight refuel	202,000	‡2.0

(E) Estimated
* For Basic Mission
**Limited by strength
†Limited by strength (see page 6, note h)
‡With external tanks

FUEL

Location	No. Tanks	*Gal
Fus	4	10,263
Wg, drop	2	3000
Bomb bay	1	3290
ATO Tank	1	558
	Total	17,111

Grade JP-3 or JP-1
*Approx. 60% self-sealing

OIL

Capacity (gal)	72
Grade	1010

BOMBS

No.	Size	Type
1	10,000	Special

Or one of the following loadings which require kits and allow for bomb bay fuel:

1	4000	G. P.
3	2000	G. P.
8	1000	G. P.

Or one of the following loadings which require long bomb bay doors, kits and allow for no bomb bay fuel:

1	22,000	G. P.
1	12,000	G. P.
2	4000	G. P.
9	2000	G. P.
16	1000	G. P.

DIMENSIONS

Wing	
Span	116'
Incidence	2°45'
Dihedral	0°
Sweepback (LE)	36°37'
Length	106.7'
Height	27.9'
Tread (outrigger)	44.3'

GUNS

No.	Cal	Rds ea	Location
2	.50	600	Fus, tail

CAMERAS

Vertical station for one of the following:
K-17C, 6", 12" or 24" lens
K-22A, 6", 12", 24" or 40" lens
K-38, 12", 24" or 36" lens
K-37, 12" lens, night camera and accessories

ELECTRONICS

VHF Command	AN/ARC-3
Omni-Direct. Recvr	AN/ARN-14
Bombing-Nav. Radar	K-4A
Fire Control System	A-2
Loran	AN/APN-9
Radar Beacon	AN/APN-68
Interphone	USAF Combat
IFF	AN/APX-6
Glide Path Recvr	AN/ARN-5B
Radio Compass	AN/ARN-6
ECM	AN/APT-5A

Loading and Performance—Typical Mission

CONDITIONS				BASIC MISSION I	TRAINER RADIUS II
TAKE-OFF WEIGHT			(lb)	181,440	143,000
Fuel at 6.8 lb/gal (grade JP-1)			(lb)	86,800	61,200
Military load (Bombs)			(lb)	10,000	None
Wing loading			(lb/sq ft)	127.1	100.2
Stall speed (power off, landing configuration)			(kn)	137.0	121.0
Take-off ground run at SL	①		(ft)	9400	5200
Take-off ground run with ATO	①	⑤	(ft)	7500	—
Take-off to clear 50 ft	①		(ft)	10,820	6340
Take-off to clear 50 ft with ATO	①	⑤	(ft)	8860	—
Rate of climb at SL	②		(fpm)	2650	3650
Time: SL to 25,000 ft	②		(min)	14.0	9.6
Time: SL to 30,000 ft	②		(min)	20.0	17.7 ⑧
Service ceiling (100 fpm)	②		(ft)	33,500	38,450
Service ceiling (one engine out)			(ft)	⑥	⑥
COMBAT RANGE	③		(n. mi.)	3360	⑥
Average speed			(kn)	431	⑥
Initial cruising altitude			(ft)	30,500	⑥
Final cruising altitude			(ft)	44,800	⑥
Total mission time			(hr)	8.0	⑥
COMBAT RADIUS	③		(n. mi.)	1750	1230
Average speed			(kn)	431	431
Initial cruising altitude			(ft)	30,500	35,500
Bombing altitude			(ft)	39,400	—
Bomb run speed	②		(kn)	446	—
Final cruising altitude			(ft)	44,500	44,500
Total mission time			(hr)	8.3	5.9
COMBAT WEIGHT	④		(lb)	121,800	113,000
Combat altitude			(ft)	35,000	42,500
Combat speed	①		(kn)	486	461
Combat climb	①		(fpm)	1500	500
Combat ceiling (500 fpm)	①		(ft)	41,500	43,000
Service ceiling (100 fpm)	①		(ft)	43,000	44,000
Service ceiling (one engine out)			(ft)	⑥	⑥
Max rate of climb at SL	①		(fpm)	5200	6100
Max speed at 10,800 ft	①		(kn)	537	537
LANDING WEIGHT			(lb)	91,844	87,920
Ground roll at SL			(ft)	⑦	⑥
Ground roll (auxiliary brake)	⑧		(ft)	5400	⑥
Total from 50 ft	⑧		(ft)	⑥	⑥
Total from 50 ft (auxiliary brake)			(ft)	6520	⑥

NOTES

① Max power shown.
② Normal power
③ Detailed descriptions of RADIUS & RANGE missions are given on page 6.
④ For Radius Mission if Radius is
⑤ ATO used in take-off (18,000 lb thrust)
⑥ Not available
⑦ Climb to 35,500 ft
⑧ With 32 ft ribbon braking parachute

(See page 6, note d)

PERFORMANCE BASIS:
(a) Data source: Contractor's estimates
(b) Performance is based on powers shown on page 6.

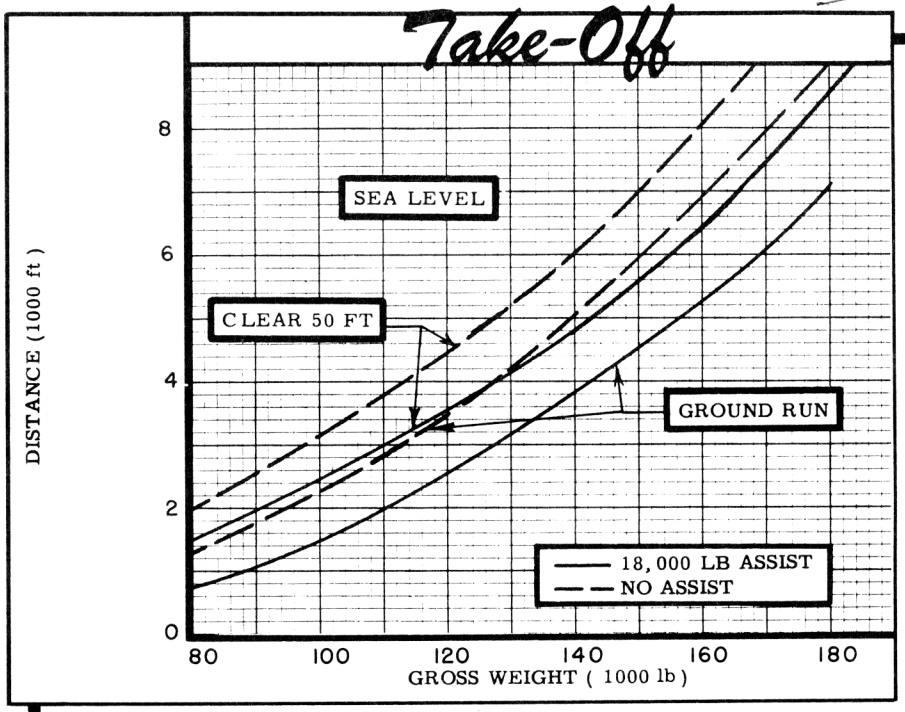
Take-Off
DISTANCE (1000 ft)
0
2
4
6
8
SEA LEVEL
CLEAR 50 FT
GROUND RUN
18,000 LB ASSIST
NO ASSIST
80
100
120
140
160
180
GROSS WEIGHT (1000 lb)

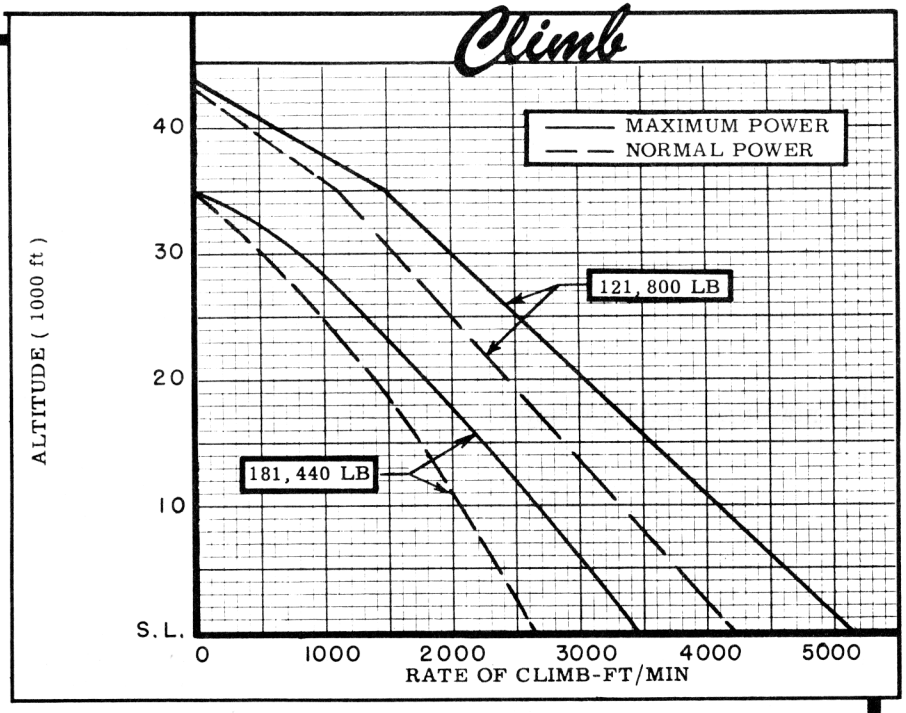
Climb
ALTITUDE (1000 ft)
S.L.
10
20
30
40
MAXIMUM POWER
NORMAL POWER
121,800 LB
181,440 LB
0
1000
2000
3000
4000
5000
RATE OF CLIMB-FT/MIN

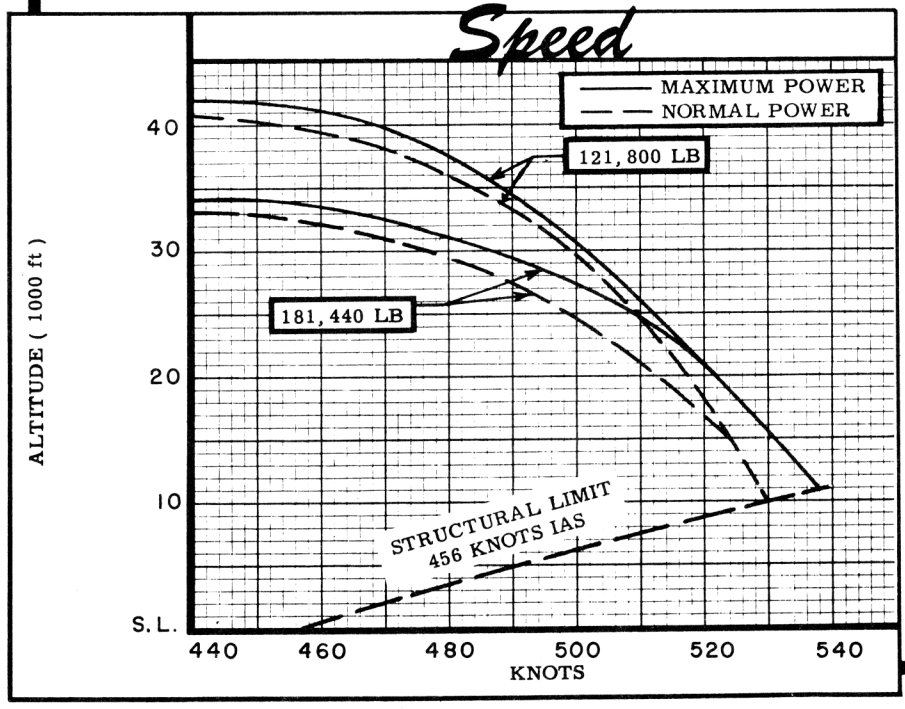
Speed
ALTITUDE (1000 ft)
S.L.
10
20
30
40
MAXIMUM POWER
NORMAL POWER
121,800 LB
181,440 LB
STRUCTURAL LIMIT
456 KNOTS IAS
440
460
480
500
520
540
KNOTS

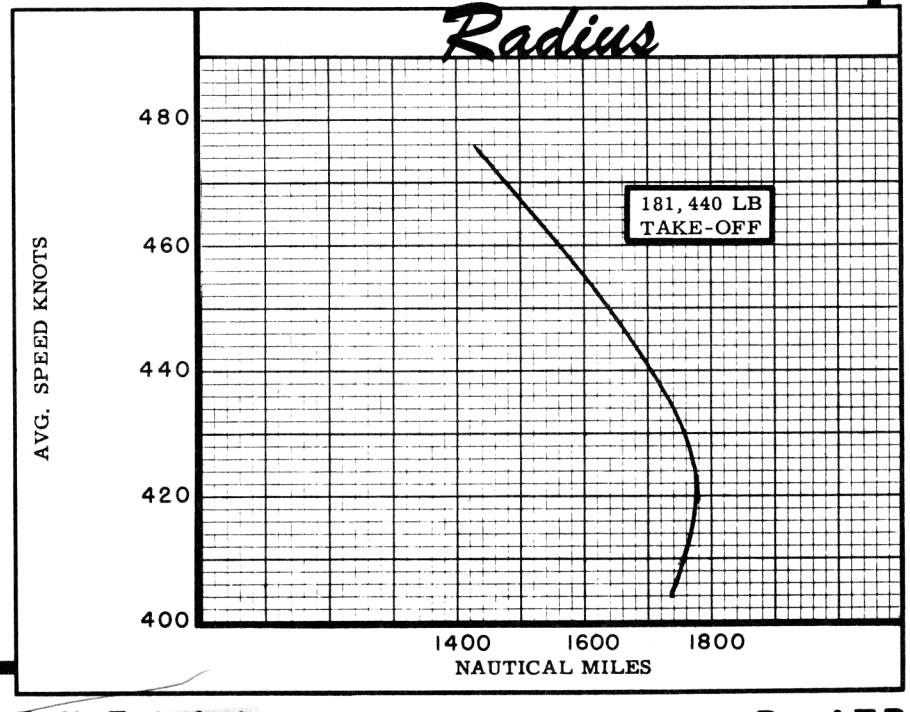
Radius
AVG. SPEED KNOTS
400
420
440
460
480
181,440 LB
TAKE-OFF
1400
1600
1800
NAUTICAL MILES

NOTES

FORMULA: RADIUS MISSION I

Take-off climb on course to 30,500 ft. altitude at normal power cruise out at long range speeds increasing altitude with decreasing airplane weight, make 6 minute normal power bomb-run to target, drop bombs, conduct normal power evasive action for 6 minutes, start cruise to home base at 41,000 ft. altitude arriving over home base at 44,500 ft. altitude. Range free allowances are: 5 minutes normal power fuel consumption for starting engines and take-off, plus 6 minutes normal power evasive action, plus 10% of initial fuel for reserve.

FORMULA: RANGE MISSION I

Same as the outbound leg of the Basic Radius formula continued without dropping the bombs until 90% of the initial fuel has been used at 44,800 ft. altitude, leaving 10% fuel reserve for combat, evasive action, landing reserve, or other considerations for which no distance credit is allowed.

FORMULA: RADIUS MISSION II

Same as the Basic Radius formula except no assist is used for take-off and no bombs are carried. Take-off weight is limited to 143,000 lb. to meet the take-off requirement of 7,500 ft. over a 50 ft obstacle on an Army hot day. Initial altitude for start of cruise out is 35,000 ft. and final altitude over the home base is 44,500 ft. Range free allowances are the same as for the Basic Radius formula.

GENERAL DATA:

(a) Estimated data

(b) Airplane performance based on test performance of engines installed in production B-47A and B-47B airplanes.

(c) Normal technique for take-off with ATO-15 second duration, rockets fired 10 seconds before take-off.

(d) Landing distances are based on 6 engines at 52% (4200 RPM) for approach and 2 inboard engines at 52% RPM for ground roll. Brakes applied at 40 knots.

(e) Times to climb do not include take-off time and time to accelerate to best climb speed.

(f) Max. landing weight 180,000 lb. limited by max flight weight without external fuel (computed on basis of 8 ft/sec. ultimate rate of descent with 1G wing lift.)

(g) Engine ratings shown on page 3 are engine manufacturer's guaranteed ratings. Power values used for performance calculations are:

J47-GE-11			
S. L. Static	LB	RPM	MIN.
Max:	5420	7950	5
Nor:	5030	7640	Cont.

Note: Above values from G. E. letter dated 16 May 1950.

(h) Limited by strength to 185,000 lb which includes 5000 lb ATO oxidizer for liquid rockets pending availability. (Liquid rockets utllize normal aircraft fuel in conjunction with the oxidizers).

(i) JP-3 is primary fuel, JP-1 is alternate grade used to show performance data.

SUPPLEMENTAL

The data herein is to present the radius capabilities of the B-47B when refueled from various tankers. The tankers are considered to refuel the B-47B at the optimum altitude and distance from base for the given tanker bomber combination. Only a single refuel condition is considered. A generalized profile of this mission is shown below.

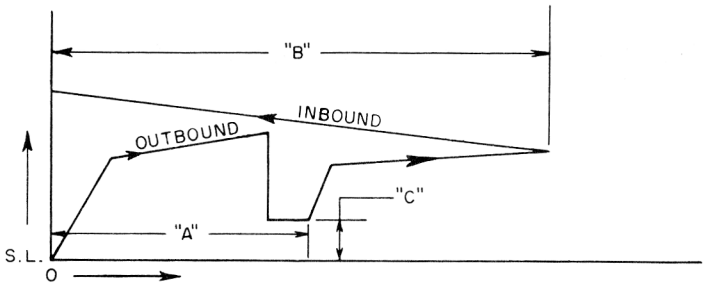

WHERE: "A" is distance to refuel point
"B" is total mission radius
"C" is altitude of refuel

Distance "A" and altitude "C" for various tankers may be determined from table 1 below. These altitudes and distances are so chosen that the tanker flies at max refuel speed (not to exceed normal rated power speed) and the bomber is capable of making good a 300 fpm rate of climb in the downwash of the tanker and does not operate at a lift coefficient of greater than 3/4 C_L max with flaps up.

OPTIMUM
FORMATING LIMITS

TANKER MODEL	REFUEL DISTANCE "A"	REFUEL ALTITUDE "C"
KB-29P	318 N. Mi	17,000 ft
KC-97E	520 N. Mi	20,000 ft
YKC-124B	1010 N. Mi	25,000 ft

Table 1

With the distance "A" and altitude "C" for any given tanker (from table 1) enter figure 1 with "A" and move horizontally to the proper altitude "C" (interpolating where necessary) and read vertically down to obtain total mission radius.
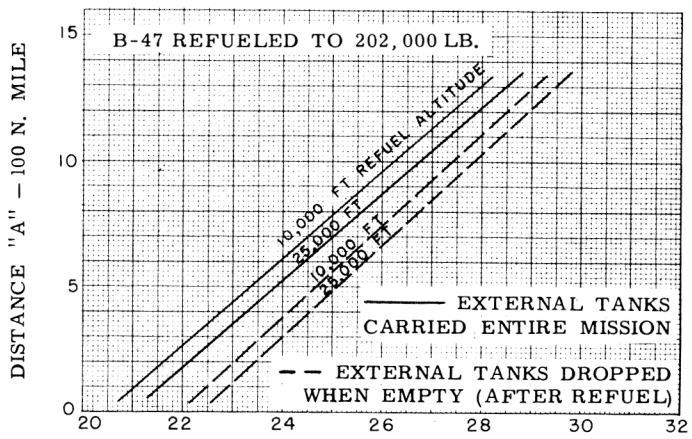
B-47B
SINGLE REFUEL RADIUS